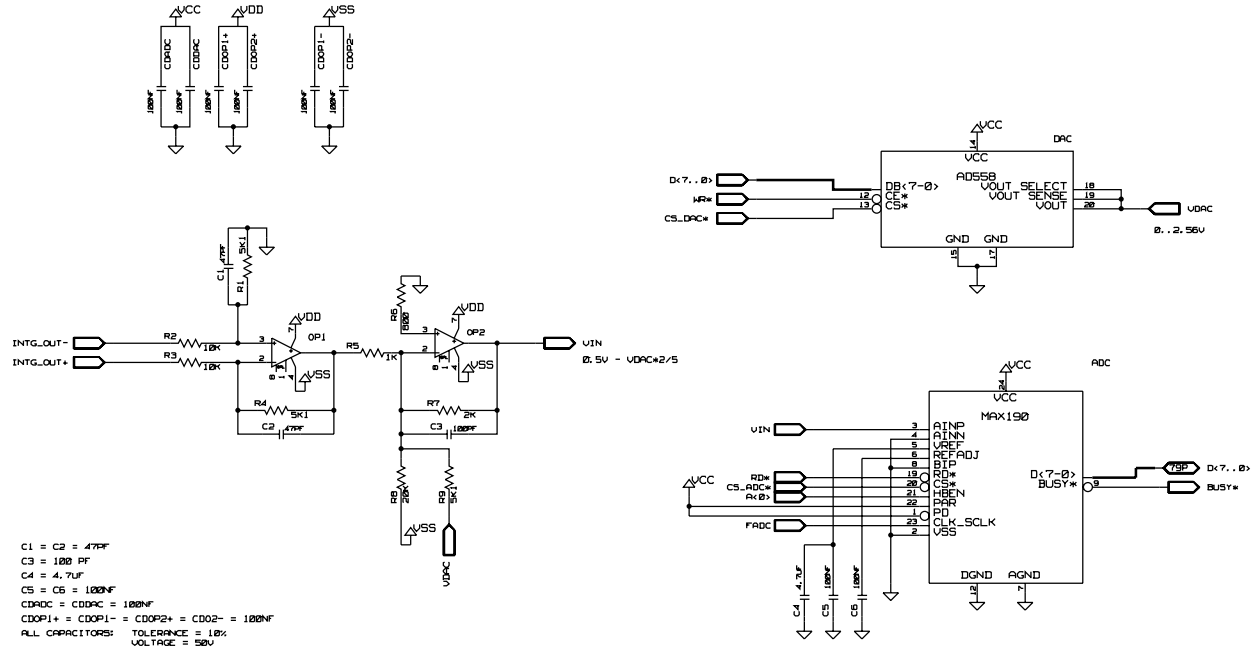

C1 = C2 = 47PF
C3 = 100 PF
C4 = 4.7UF
C5 = C6 = 100NF
CDADC = CDDAC = 100NF
CDOP1+ = CDOP1- = CDOP2+ = CDO2- = 100NF
ALL CAPACITORS: TOLERANCE = 10%
VOLTAGE = 50V

R1 = R4 = R9 = 5.1K
R2 = R3 = 10K
R5 = 1K
R6 = 800 OHM
R7 = 2K
R8 = 20K
ALL RESISTORS: TOLERANCE = 1%
POWER = 1/4W

INPUT STAGE, ADC AND DAC CONNEXIONS

DRAWING

TITLE: ADC	DATE: Wed Feb 2 13:41:12 2000
ENGINEER: GEORGES BLANCHOT LAIA CARDIEL	PAGE: 2